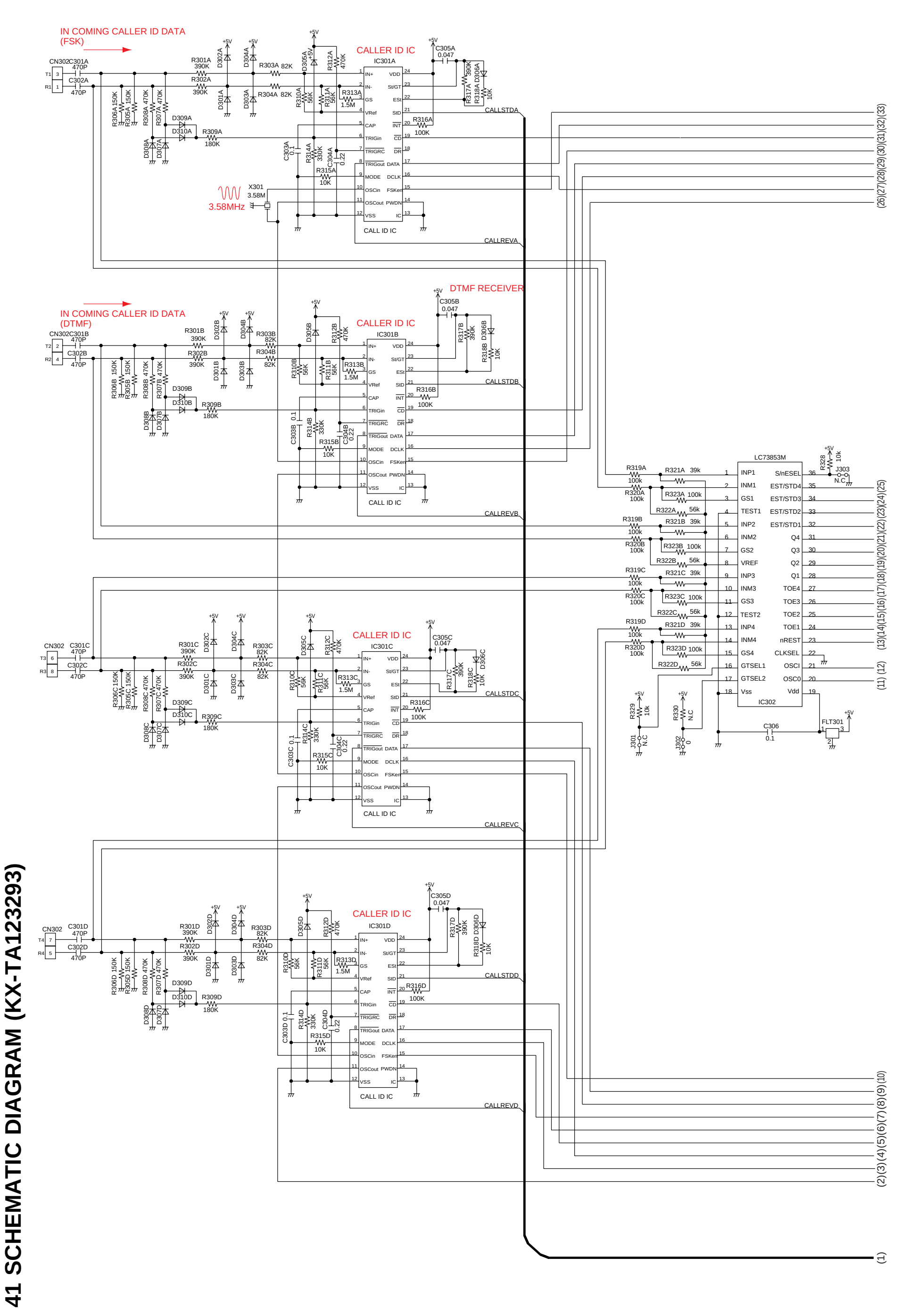

41 SCHEMATIC DIAGRAM (KX-TA123293)

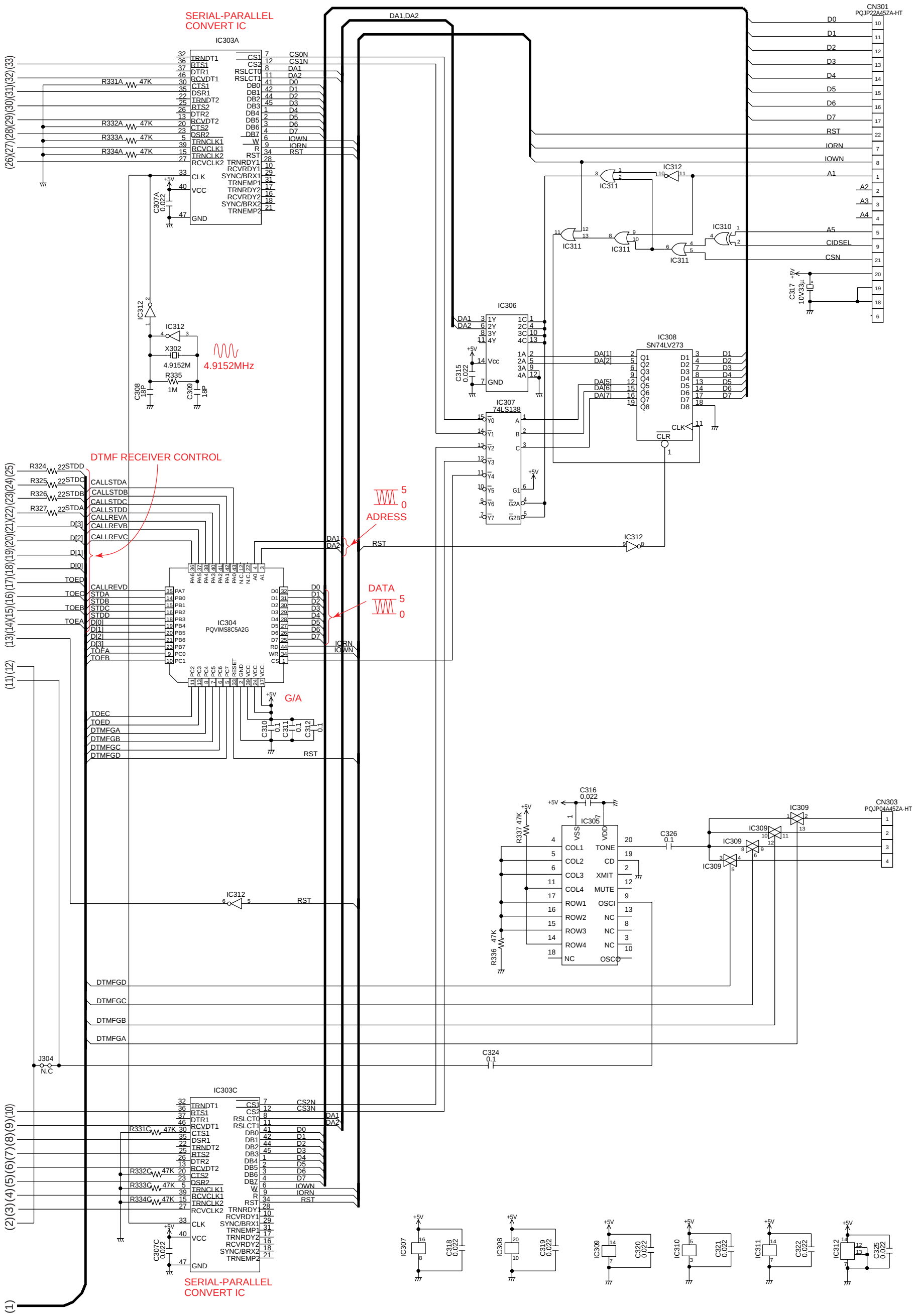
SERIAL-PARALLEL CONVERT IC
IC303A
DA1,DA2
CN301
PQJP22A45ZA-HT
DTMF RECEIVER CONTROL
IC304
PQVIMS8C5A2G
ADRESS
DATA
G/A
IC306
IC307
74LS138
IC308
SN74LV273
IC312
IC311
IC310
4.9152MHz
X302
4.9152M
R335
1M
C308
18P
C309
18P
C307A
0.022
C315
0.022
C317
10V33µ
C316
0.022
IC305
C326
0.1
C324
0.1
CN303
PQJP04A45ZA-HT
IC309
R337 47K
R336 47K
J304
N.C
IC303C
SERIAL-PARALLEL CONVERT IC
C307C
0.022
C310
0.1
C311
0.1
C312
0.1
C318
0.022
C319
0.022
C320
0.022
C321
0.022
C322
0.022
C325
0.022